Analytical Chemistry Cumulative Exam
March 14, 2025

At the end of this exam are equations and tables to help you to answer these questions

Topic: Basic Electrochemical principles, reference electrodes, the simple equivalent circuit, and cyclic voltammetry.

1. (9 points) A reference electrode is made by placing a solution containing a Cl^- concentration of **3.000 M** around a AgCl-coated silver wire. What is this reference electrode's potential vs. NHE at 25 °C? (Assume that all activity coefficients are unity.) Note that the E° value under standard conditions is **0.2223 V vs. NHE** for the half reaction, $AgCl_{(s)} + e^- = Ag + Cl^-$.

2. (15 Points) A half reaction involving the oxidation of CO to CO_2 is:

$$\mathbf{H_2O_{(l)} + CO_{(g)} = CO_{2(g)} + 2e^- + 2H^+}$$

Species	ΔG_f^0 (kcal/mol)	ΔG_f^0 (kJ/mol)
CO (g)	-32.81	-137.3
CO_2 (g)	-94.26	-394.6
CH_4 (g)	-12.14	-50.82
H_2O (l)	-56.69	-237.3
C_2H_2 (g)	50.00	209.3
C_2H_6 (g)	-7.86	-32.9
H_2 (g)	0.00	0.00

Using the table of free energies, calculate the standard potential vs. NHE for this half reaction.

(Hint: Start by calculating the standard free energy for the following overall reaction:

$$\boldsymbol{H_2O_{(l)} + CO_{(g)} = CO_{2(g)} + H_{2(g)}}\ \boldsymbol{)}$$

3. (26 Points). Here is a schematic of a cross section of a typical alkaline battery. An overall reaction of the alkaline cell during a continuous discharge is:

$$___ Zn + ___ MnO_2 + ___ H_2O \xrightarrow{(KOH)} ___ Zn(OH)_2 + ___ MnOOH$$

(Note that MnOOH is not a "peroxide". Use the usual oxidation number for both oxygens for a polyatomic ion.)

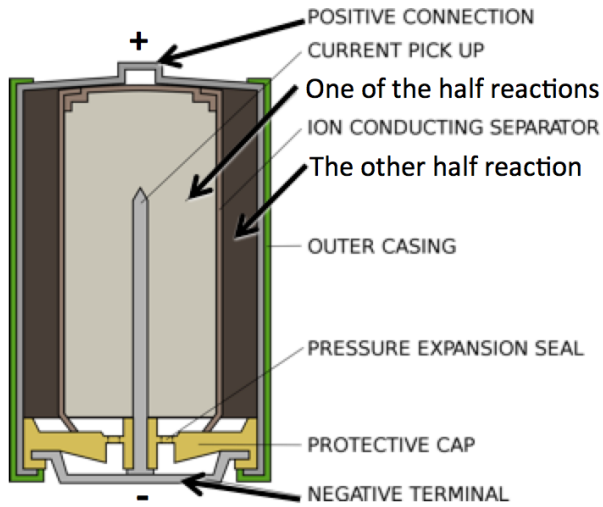

(a) (4 points) What are the oxidation numbers (also known as oxidation states) for Mn and Zn in the reactants and in the products?

(b) (5 points) Balance the overall chemical reaction by placing coefficients in front of each of the reactants and products. If a coefficient is unity, please write the number "1".

(c) (2 points) Which of the three reactants, Zn, MnO_2, or H_2O is the oxidant?

(d) (3 points) Is the zinc half reaction or is the manganese half reaction taking place at the cathode?

(e) (6 points) There are two concentric, cylindrical compartments in this battery. One of them contains the zinc half reaction and the other contains the manganese half reaction. Note that in the diagram, the button at the top of the battery is the positive terminal and is connected to the outer cylindrical compartment. The bottom contact is the negative terminal and is connected to the inner cylindrical compartment. Given that the battery's spontaneous reaction is its discharging one, which half reaction, the zinc or the manganese one, must be taking place in each of these compartments?

(f) (6 points) Without performing any calculations, what can you say about the sign of the Gibbs free energy for this reaction when the battery is new? What can you say about the magnitude of the Gibbs free energy once the battery is completely "dead"?

4. (12 points) Consider this diagram of a simple equivalent circuit for an electrochemical cell.

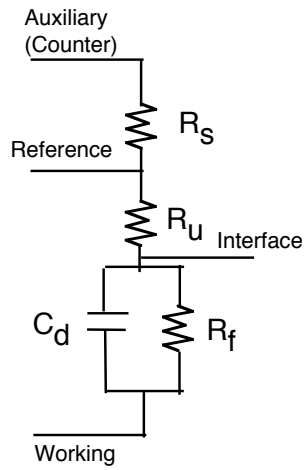

Is this representation of an electrochemical cell realistic? How is it similar to real electrochemical systems (give examples and explain)? How does it differ from real electrochemical systems (give examples and explain)? Discuss the equivalent circuit's strengths and weaknesses.

5. (36 points) On the right is a series of cyclic voltammograms obtained in a solution containing 1.0 x 10^{-3} M redox species in its oxidized form in 0.1 M KCl at a glassy carbon disk electrode with a radius of 0.10 cm. (The area of a disk is πr^2, where r is the radius). Each CV starts at +0.100 V, sweeps out to -0.3 V and then returns to +0.100 V. (The temperature is 25 °C.) Note that the CV responses are plotted in non-IUPAC convention, where reducing current is positive.

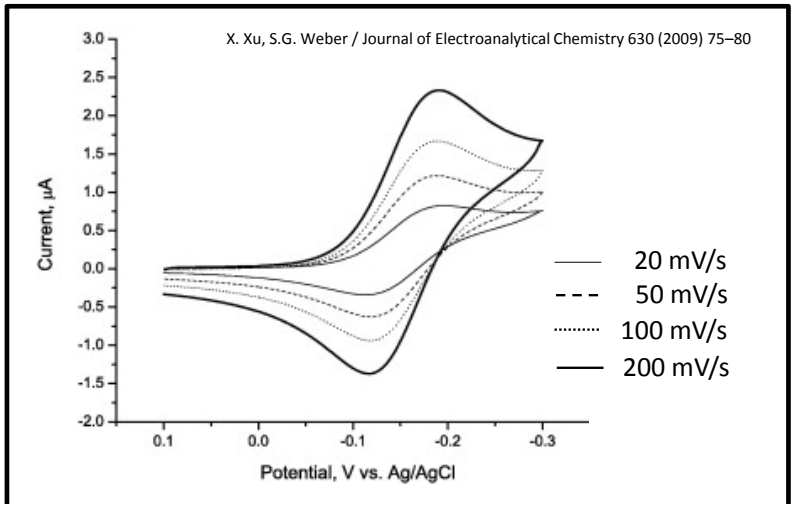

(a) (10 points) Measure the quantities E_{pf}, E_{pr}, i_{pf}, i_{pr} for the response at the highest scan rate.

(b) (6 points) Calculate $E_{1/2}$, ΔE_p, and i_{pr}/i_{pf} for the response at the highest scan rate.

(c) (10 points) What information do each of the parameters in part (b) give you about the chemical species and its chemical and electrochemical behavior?

(d) (10 points) Based on the trend of ΔE_p values from the smallest to the largest scan rate, what kind of electron transfer kinetics does the reduction of this redox species have? (For example, "reversible", "quasireversible", OR "irreversible") Explain.

Analytical Cume Equations and Constants Sheet
March 14, 2025

Ideal Gas Constant and Faraday Constant

R = 0.08205746(14) L atm K^{-1} mol^{-1} = 8.3144621(75) J K^{-1} mol^{-1}

F = 96485.3 Coul/mol e^-

RT/F = 0.02569 V at 25 °C

f = F/RT = 38.92 V^{-1} at 25 °C

Temperature

0 °C = 273.15 K

Δ°C = ΔK

Room temperature = 25 °C = 273.15 + 25 = 298.15 K

$$\Delta G = \Delta G^o + RT \ln \prod a^{\nu_i}$$

$$\Delta G^o_{rxn} = \sum \Delta G^o_{f,products} - \sum \Delta G^o_{f,\text{reactants}}$$

$$\Delta G_{rxn} = -n\,F\,E_{rxn} \quad (\textit{note}: \Delta G^o = -nFE^o)$$

$$E_{rxn} = E_{cell} = E_{cathode} - E_{anode} = E_{right} - E_{left} = E_{red} - E_{ox}$$

$$E = E^o + \frac{RT}{nF} \ln \prod a^{\nu_i} = E^o + \frac{RT}{nF} \ln \frac{(O)}{(R)}$$

$$E = E^{o'} + \frac{RT}{nF} \ln \prod [x]^{\nu_i} = E^{o'} + \frac{RT}{nF} \ln \frac{[O]}{[R]}$$

$$E^{o'} = E^o + \frac{RT}{nF} \ln \prod \gamma^{\nu_i} = E^o + \frac{RT}{nF} \ln \frac{\gamma_O}{\gamma_R}$$

$$(R) = \gamma_R\,[R]$$

$$(O) = \gamma_O\,[O]$$

$$E_X \text{ vs. new ref.} = E_X \text{ vs. old ref.} - E_{\text{new ref.}} \text{ vs. old ref.}$$

$$i_p = 0.4463\left(\frac{F^3}{RT}\right)^{1/2} n^{3/2} D_O^{1/2} C_O^* A\, v^{1/2}$$

$$i_p = 2.69 \times 10^5\, n^{3/2} D_O^{1/2} C_O^* A\, v^{1/2} \text{ at } 25\ ^\circ\text{C}$$